E x de / Ex tD Fixed Temperature Assembly with 316 Stainless Steel Terminal Head

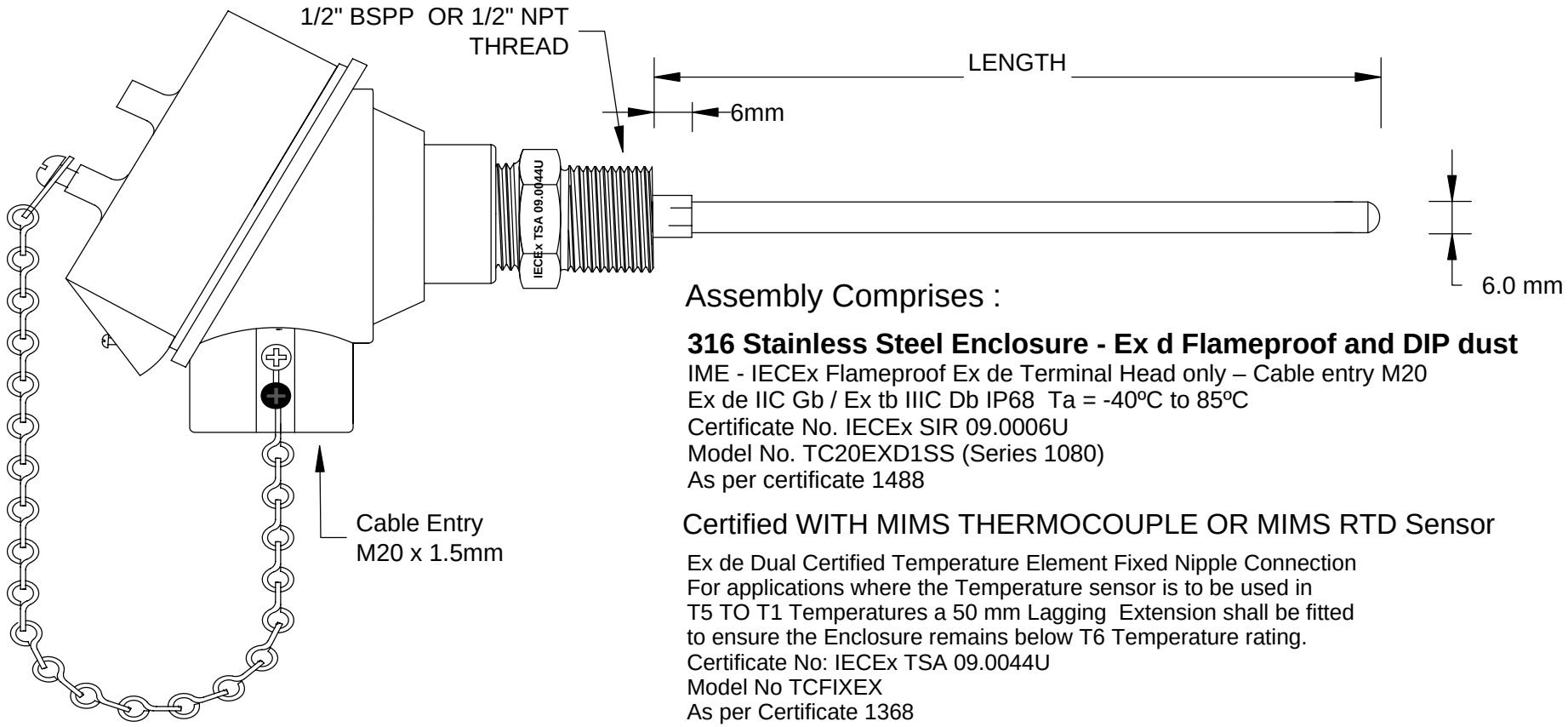

Assembly Comprises :

316 Stainless Steel Enclosure - Ex d Flameproof and DIP dust
IME - IECEx Flameproof Ex de Terminal Head only – Cable entry M20
Ex de IIC Gb / Ex tb IIIC Db IP68 Ta = -40ºC to 85ºC
Certificate No. IECEx SIR 09.0006U
Model No. TC20EXD1SS (Series 1080)
As per certificate 1488

Certified WITH MIMS THERMOCOUPLE OR MIMS RTD Sensor

Ex de Dual Certified Temperature Element Fixed Nipple Connection
For applications where the Temperature sensor is to be used in
T5 TO T1 Temperatures a 50 mm Lagging Extension shall be fitted
to ensure the Enclosure remains below T6 Temperature rating.
Certificate No: IECEx TSA 09.0044U
Model No TCFIXEX
As per Certificate 1368

IECEx Dual certified Ex de IIC T6 IP66 or Ex tD A21 T6 IP66

IECEx Certificated of Conformance No : IECEx TSA 09.0044U as a component

570

TEMPERATURE CONTROLS PTY LTD

QUALITY ENDORSED COMPANY
Certificate No:QEC 14412
AS/NZS 9001:2008

CONDITIONS

THIS DRAWING IS OUR EXCLUSIVE PROPERTY AND MUST NOT BE COPIED OR HANDED TO ANY OTHER PARTIES WITH OUT WRITTEN PERMISSION. IT SHALL BE RETURNED UPON REQUEST

SYDNEY: 7 YAMMA ST SEFTON , NSW 2162
PHONE: (02) 9721 8644 FAX : (02) 9738 9339
MELBOURNE: 8/280 Whitehall St YARRAVILLE, VIC 3013
PHONE: (03) 9687 0000 FAX : (03) 9687 1900
BRISBANE: 28A/125 Kerry Road, Archerfield Qld 4108
PHONE: 0418 222 868
EMAIL: sales@temperature.com.au

TITLE
TERMINAL HEAD C/W
Ex de / Ex tD FIXED ELEMENT

SIZE : A4	DATE : 27/11/13	**DWG NO : SD 733**
SCALE : NTS	DRAWING BY R.B	**REV : 03**